# CO-CO DIESEL LOCOMOTIVE 2-RAIL AND 3-RAIL

Nos. 2232 and 2234 2-RAIL — Nos. 3232 and 3234 3-RAIL

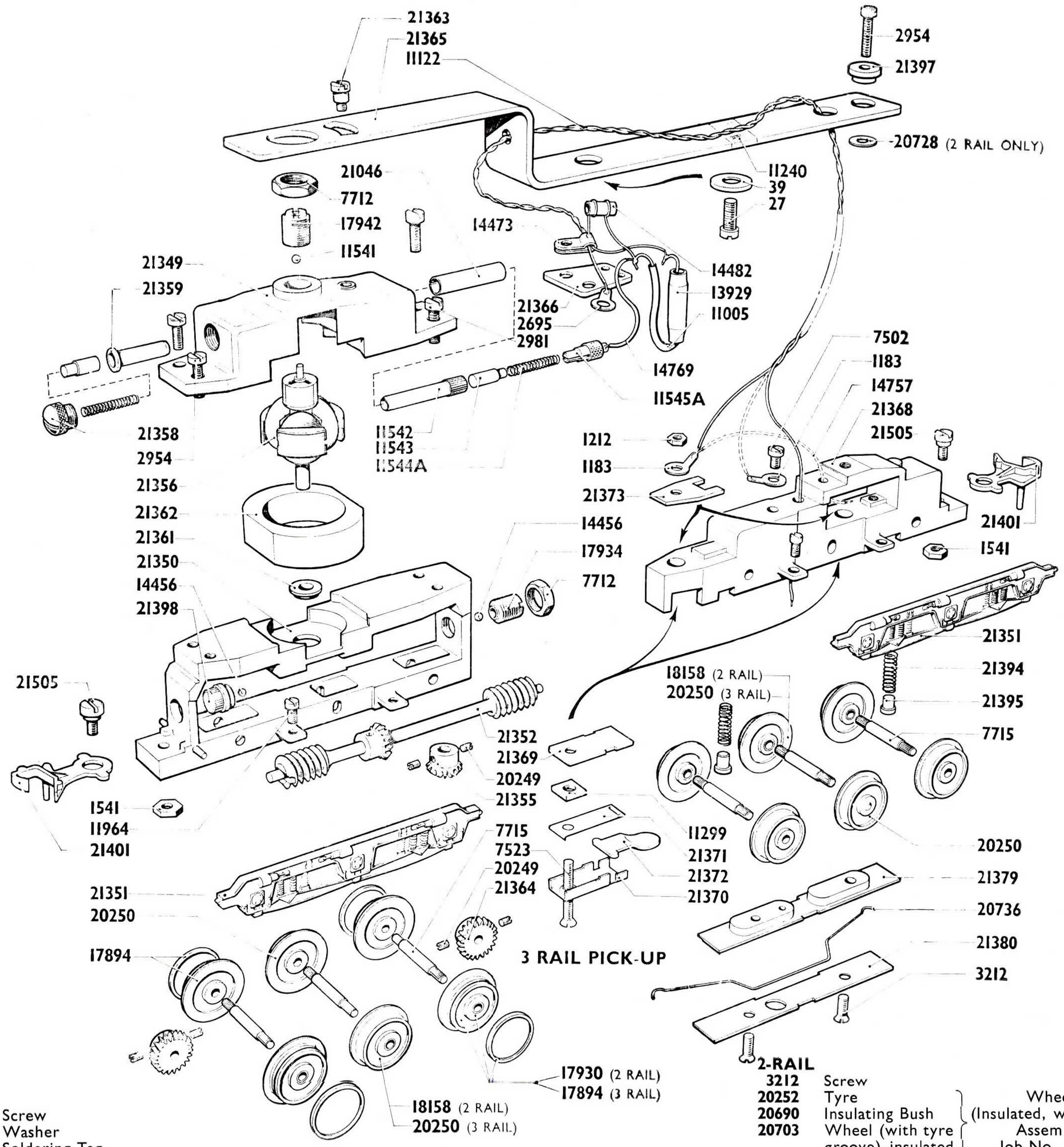


| | | |
|---|---|---|
| 27 | Screw | |
| 39 | Washer | |
| 1183 | Soldering Tag | |
| 1541 | Nut | |
| 2695 | Soldering Tag | |
| 2954 | Screw | |
| 2981 | Screw | |
| 7502 | Screw | |
| 7712 | Locking Nut | |
| 7715 | Axle | |
| 11005 | P.V.C. Sleeve | Suppression Assembly Job No. 18426 |
| 11545A | Plug (with boss) | |
| 13929 | Choke | |
| 14473 | Clamp for Wire | |
| 14482 | Condenser | |
| 14769 | Connecting Wire | |
| 21366 | Insulating Support | |
| 11122 | Connecting Wire | |
| 11240 | Self Adhesive Tape | |
| 11541 | Ball Bearing | |
| 11542 | Brush Holder | |
| 11543 | Brush | |
| 11544A | Spring | |
| 11964 | Screw | |
| 14456 | Ball Bearing | |
| 17934 | Adjustable Bearing Housing Assembly | |
| 17942 | Adjustable Bearing Housing Assembly | |
| 20249 | Grub Screw | Mitre Gear Assembly Job No. 18425 |
| 21355 | Mitre Gear | |

| | | |
|---|---|---|
| 20249 | Grub Screw | Worm Wheel Assembly Job No. 18394 |
| 21364 | Worm Wheel | |
| 20250 | Wheel | |
| 20251 | Wheel— with tyre groove | Wheel (with tyre) Assembly Job No. 17894 |
| 20252 | Tyre | |
| 21046 | Insulating Sleeve | |
| 21349 | Top Casting | |
| 21350 | Bottom Casting | |
| 21351 | Sideframe | |
| 21352 | Layshaft Assembly | |
| 21356 | Armature Shaft Assembly | |
| 21358 | Plug | |
| 21359 | Brush Holder (with flange) | |
| 21361 | Bottom Bearing | |
| 21362 | Ring Magnet | |
| 21363 | Screw | |
| 21365 | Mounting Plate | |
| 21368 | Bogie Casting | |
| 21394 | Spring | |
| 21395 | Plunger | |
| 21397 | Insulating Bush | |
| 21398 | Fixed Bearing Assembly | |
| 21401 | Coupling | |
| 21505 | Screw | |

**2-RAIL**

| | | |
|---|---|---|
| 3212 | Screw | |
| 20252 | Tyre | Wheel (Insulated, with tyre) Assembly Job No. 17930 |
| 20690 | Insulating Bush | |
| 20703 | Wheel (with tyre groove)–insulated | |
| 20690 | Insulating Bush | Wheel (Insulated) Assembly Job No. 18158 |
| 20702 | Wheel (insulated) | |
| 20728 | Washer | |
| 20736 | Wire Collector | |
| 21379 | Base for Collector | |
| 21380 | Cover for Collector Base | |

**ASSEMBLIES**

| | |
|---|---|
| 21345 | "Deltic" Housing Assembly |
| 21348 | Motor Bogie Assembly |
| 21378 | Rear Bogie Assembly |

**3-RAIL**

| | |
|---|---|
| 1212 | Nut |
| 7523 | Screw |
| 11299 | Distance Piece |
| 14757 | Connecting Wire |
| 21369 | Insulator |
| 21370 | Collector Shoe Holder |
| 21371 | Collector Shoe Spring |
| 21372 | Collector Shoe |
| 21373 | Insulator (Screw) |

**ASSEMBLIES**

| | |
|---|---|
| 18535 | "Deltic" Housing Assembly |
| 21367 | Rear Bogie Assembly |
| 21381 | Motor Bogie Assembly |